AIN SHAMS UNIVERSITY
FACULTY OF ENGINEERING
MECHATRONICS ENGINEERING DEPARTMENT

Spring 2026

MCT 333: Mechatronic System Design

Lab Session 02: Actuator Sizing

Objective:

- Perform Actuator sizing using MATLAB Simscape Multibody Link.

Steps:

- Prepare a simple inertial load CAD to be exported it to MATLAB Simscape Multi-body. Make sure to assign materials to moving parts so that the dynamic properties of the moving parts get exported with the model.

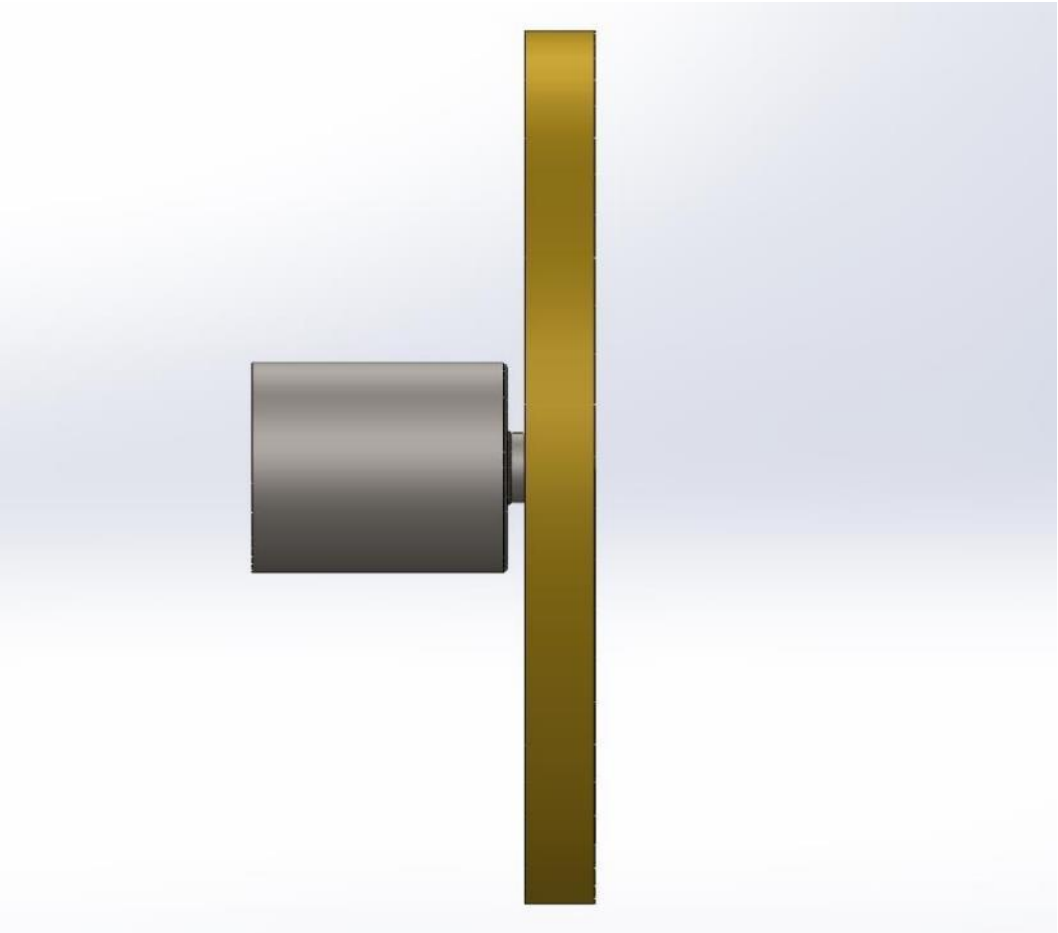

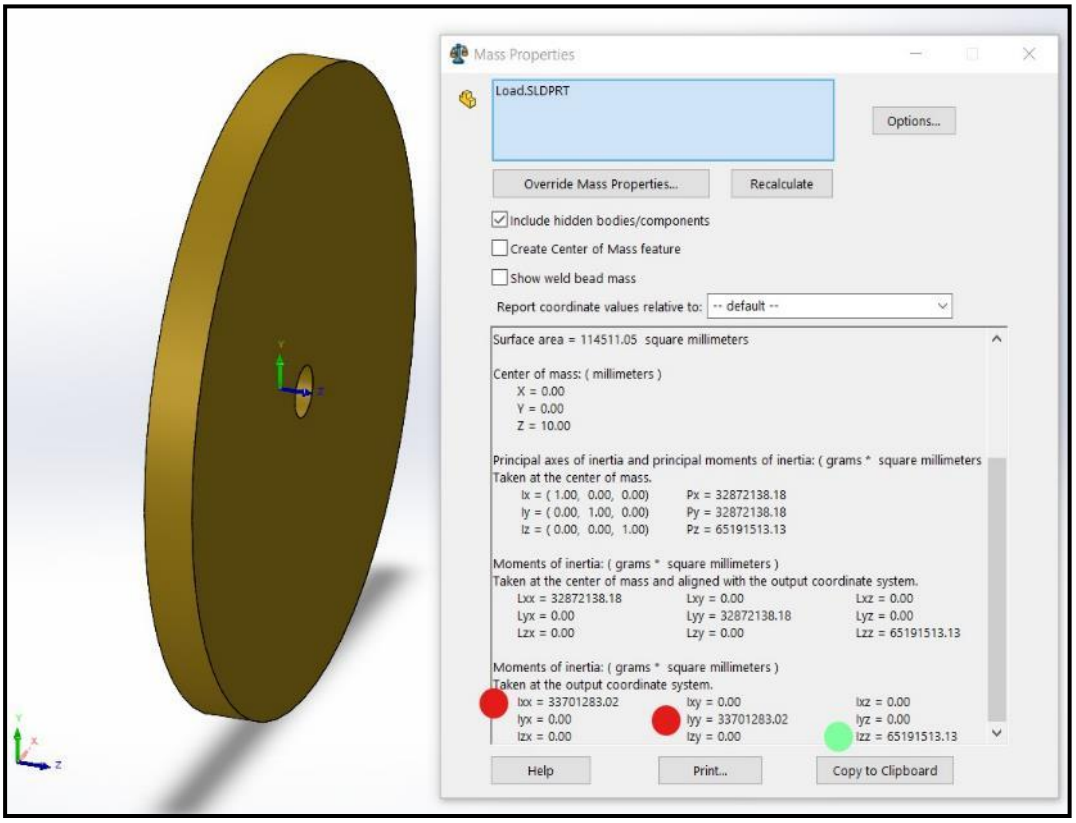

- Now, export the model to MATLAB and import it as shown previously, the imported model should look like this.

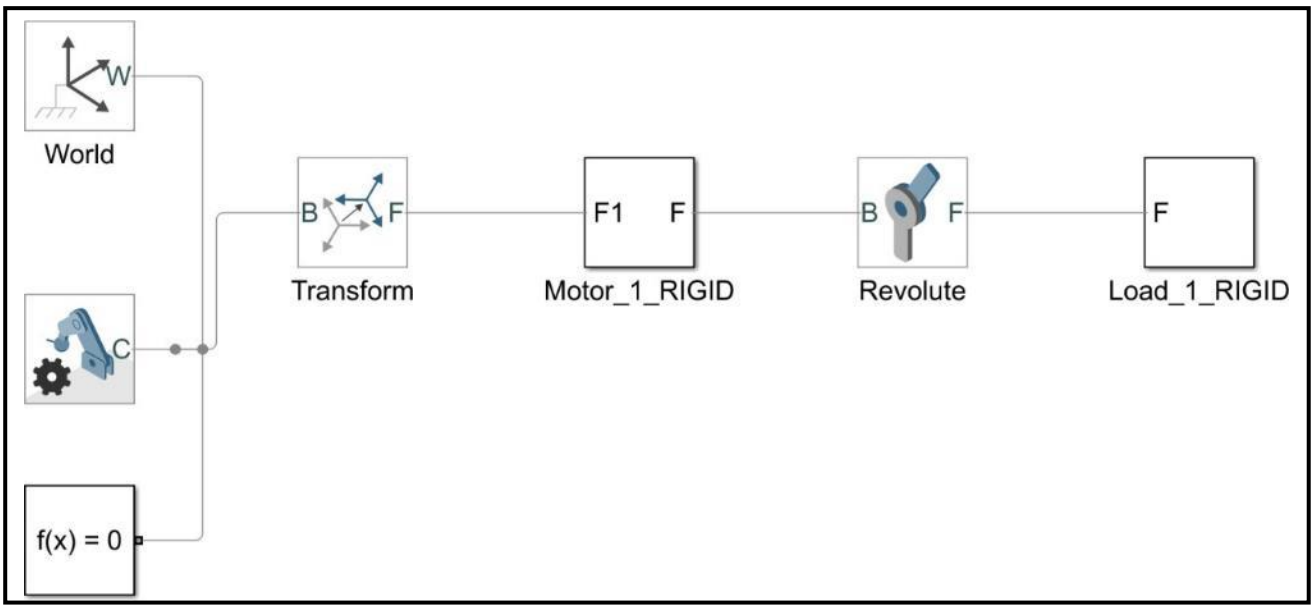

- Now, we need to check the value of the mass moment of inertia that MATLAB assigned to the load. So, we need to run the automatically generated (.m) file called (*xml file name*_DataFile.m), in order to be able to access the automatically generated parameters from the workspace.

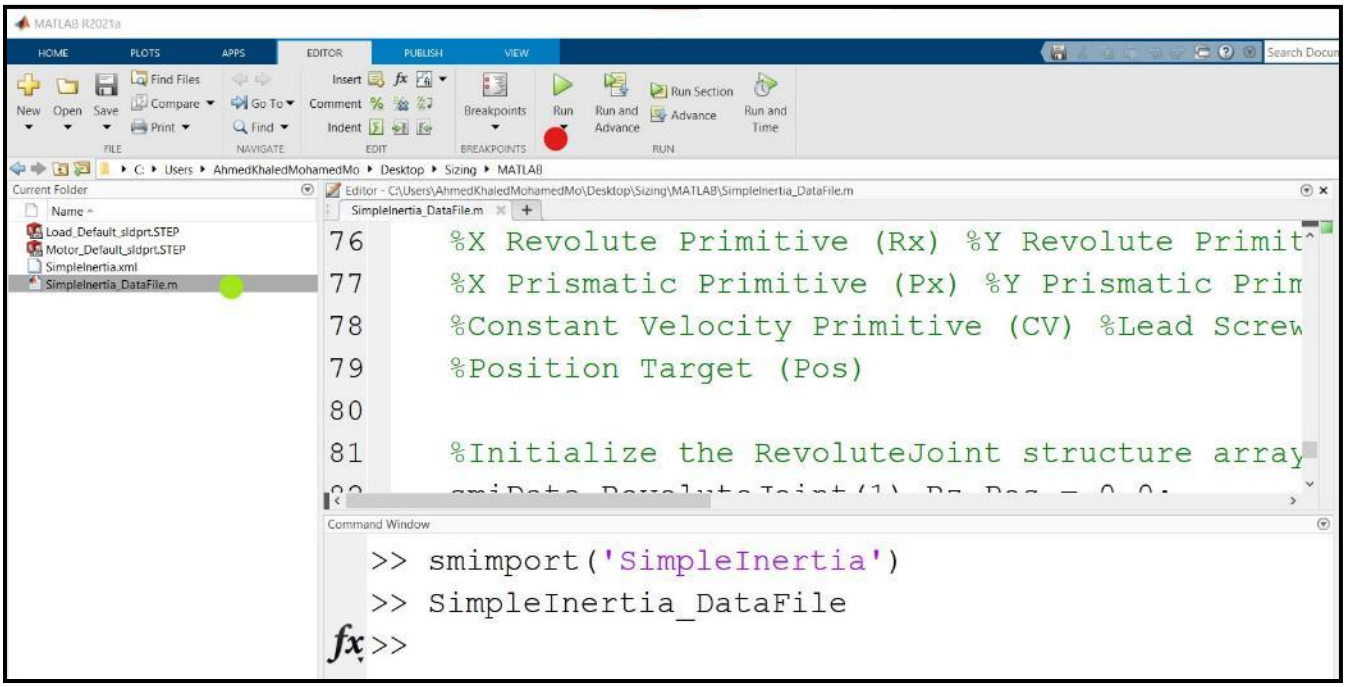

- We need to open the load subsystem and get the name of the variable holding the inertia value.

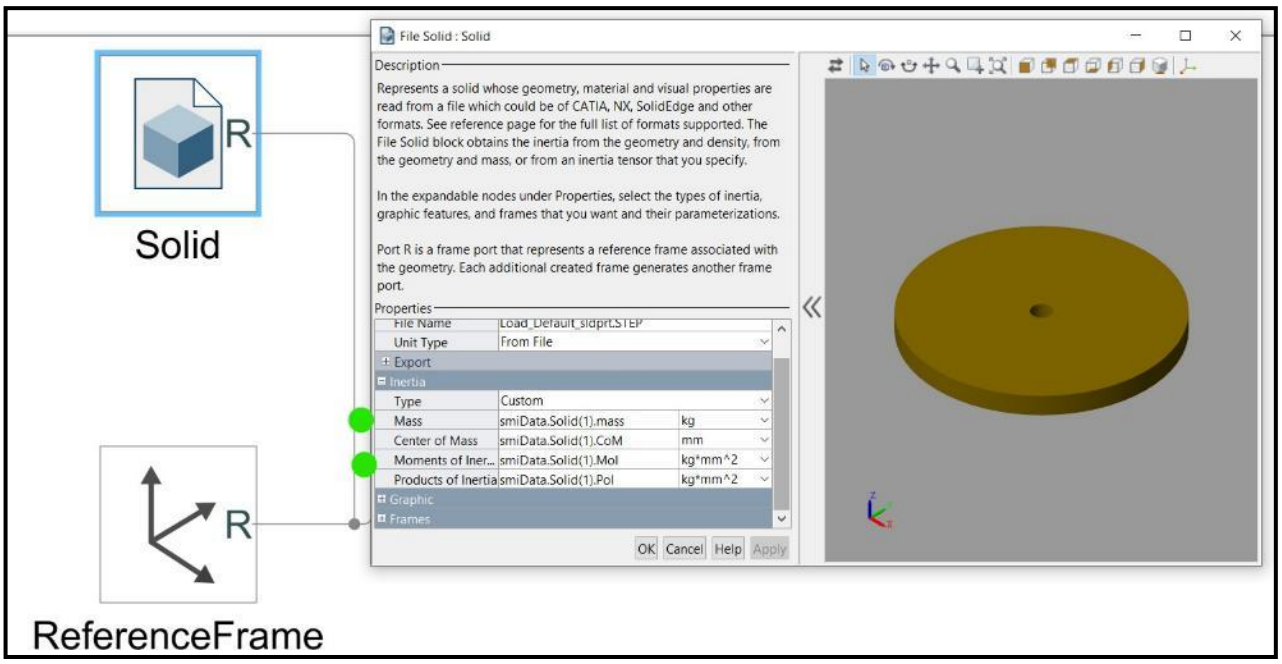

- Write the mass moment of inertia variable name in the command window to see its value.

```
>> smiData.Solid(1).MoI
ans =
    1.0e+04 *
     3.2872     3.2872     6.5192
```

- Set the Revolute Joint to have required motion as input and Automatically computing Torque.

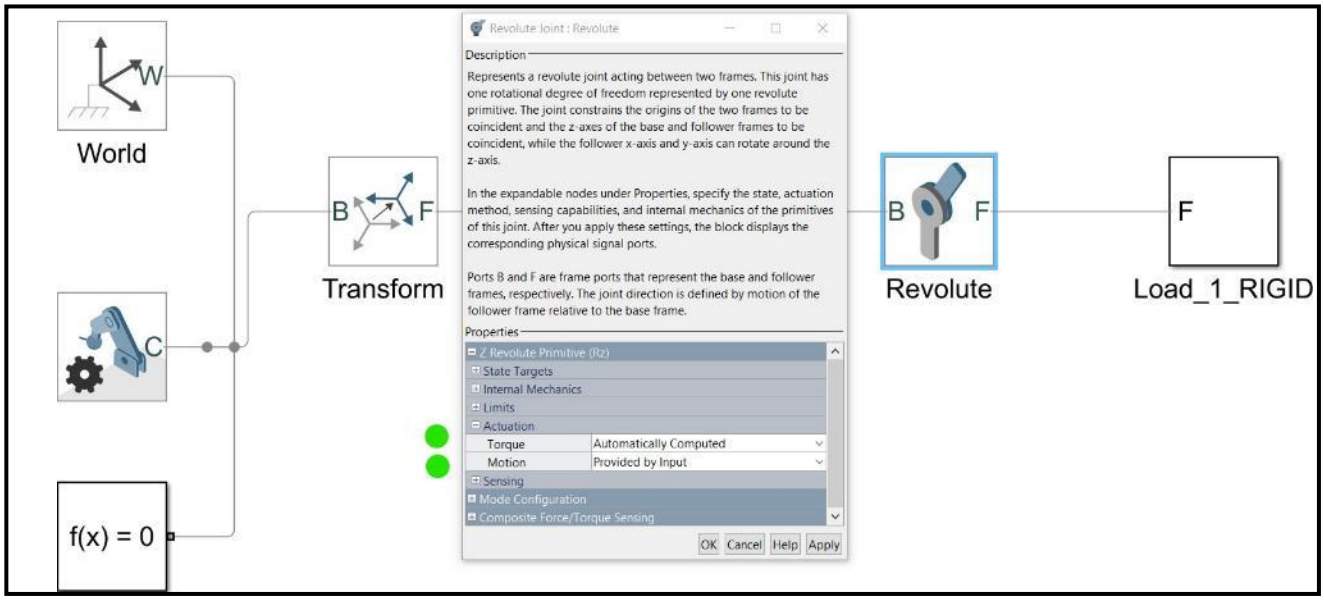

- Now, we need to show the velocity of the joint, acceleration and torque, by checking them in sensing tab.

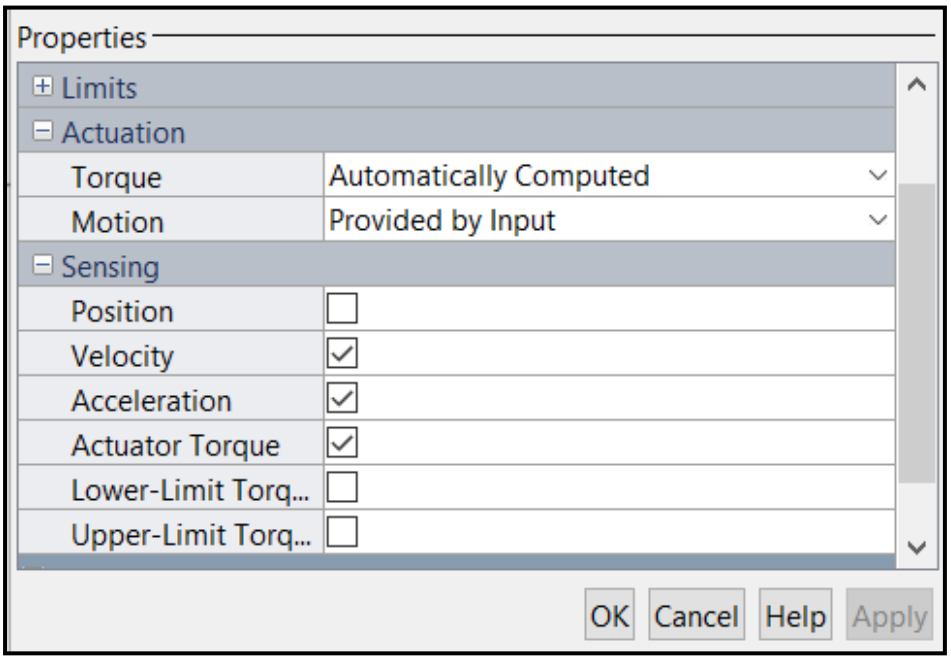

- Prepare the trapezoidal velocity profile on a signal builder.

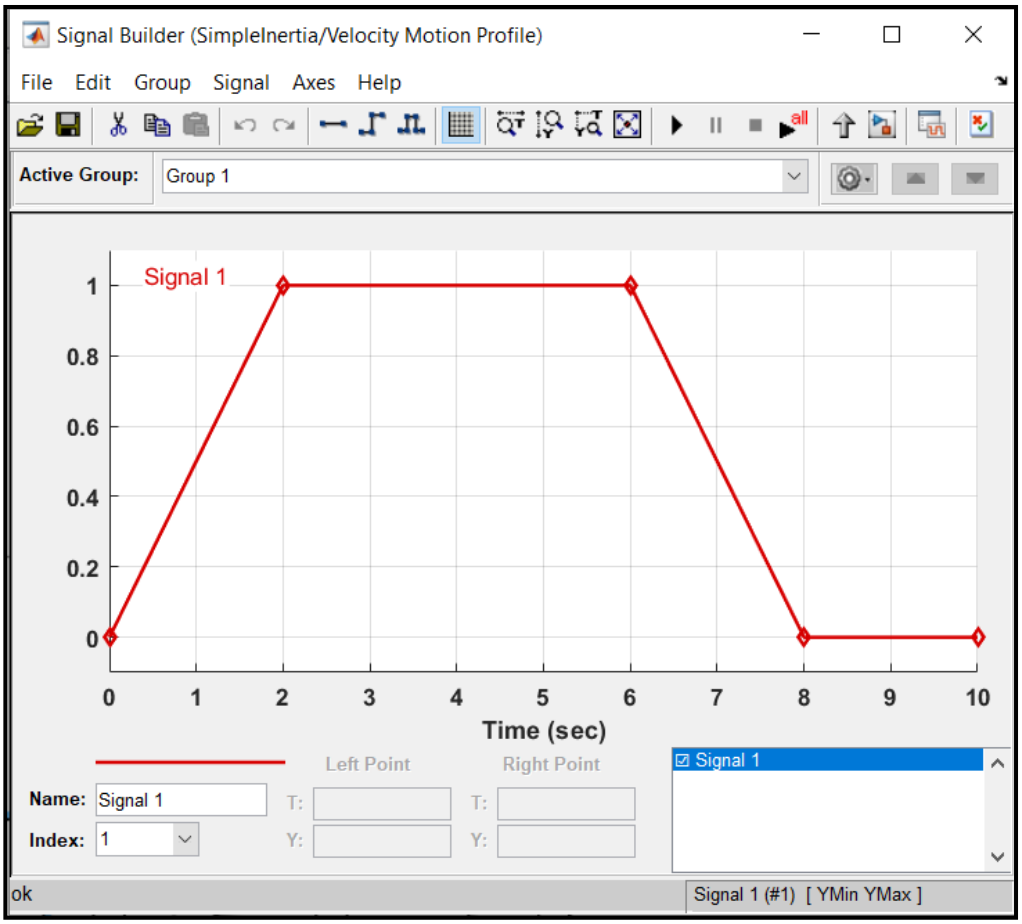

- As the joint only accept input motion signal as angular position, so we place an integrator before the (S-PS Converter).

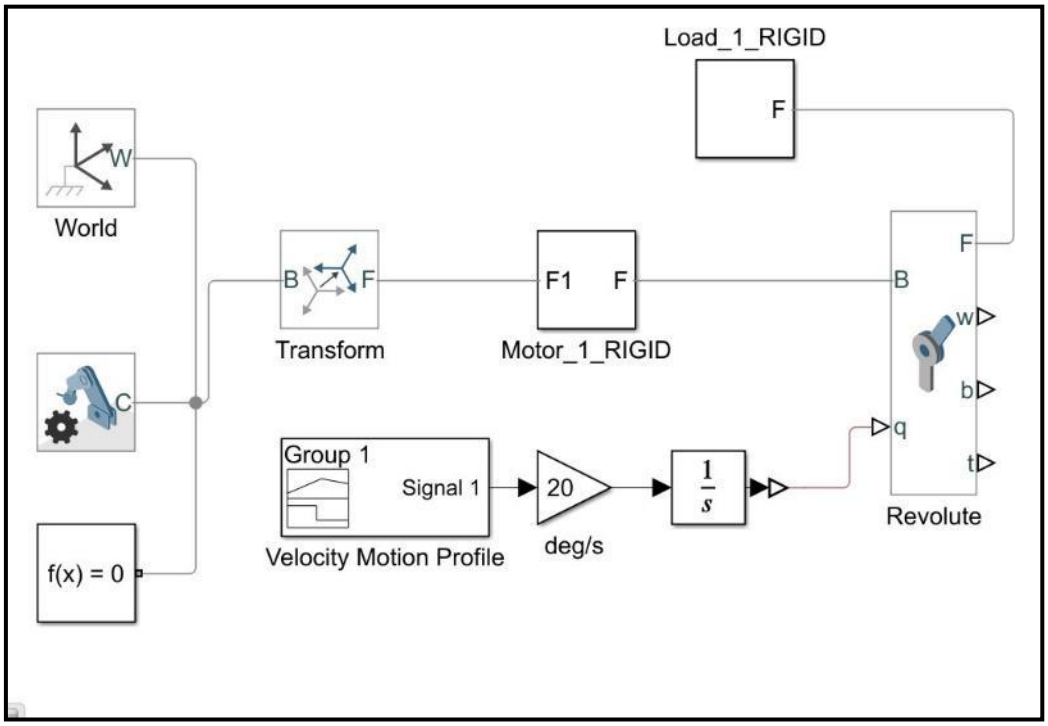

- Set the units of the 3 output signals as follows.

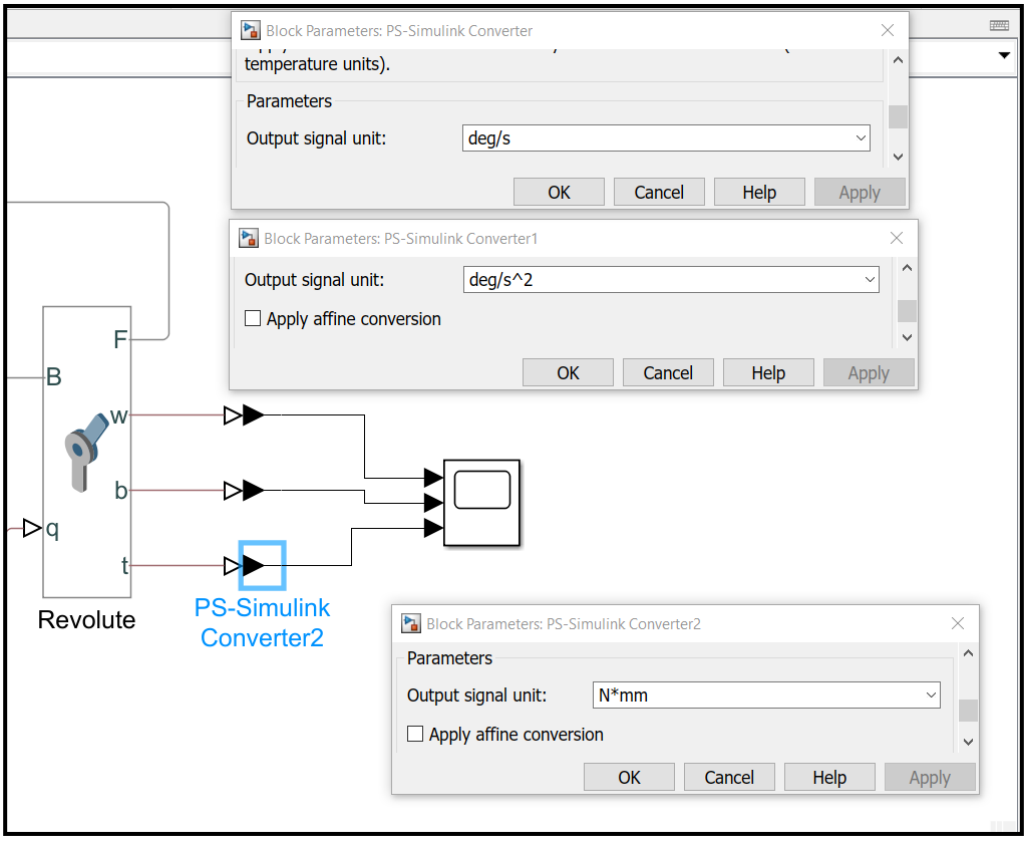

- Adjust Model solver settings to be as follows.

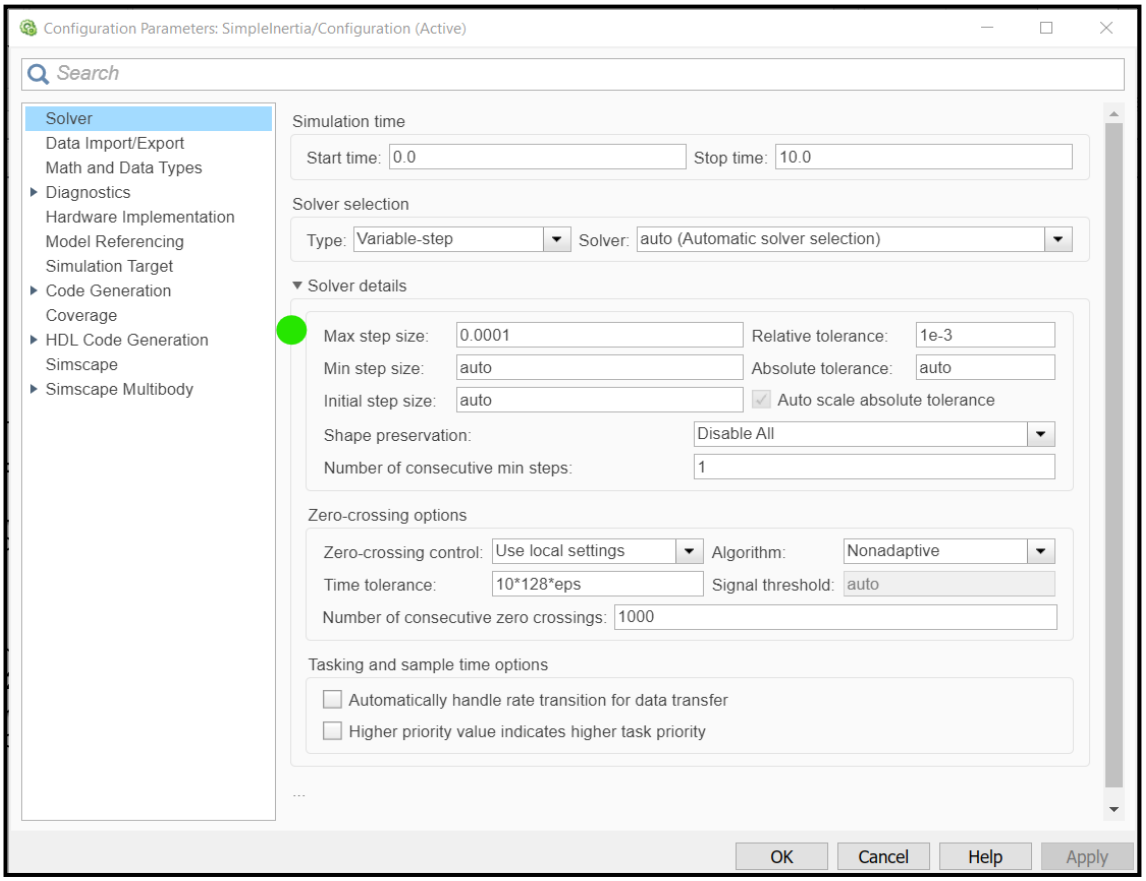

- The results will look like that and that's what we expected.

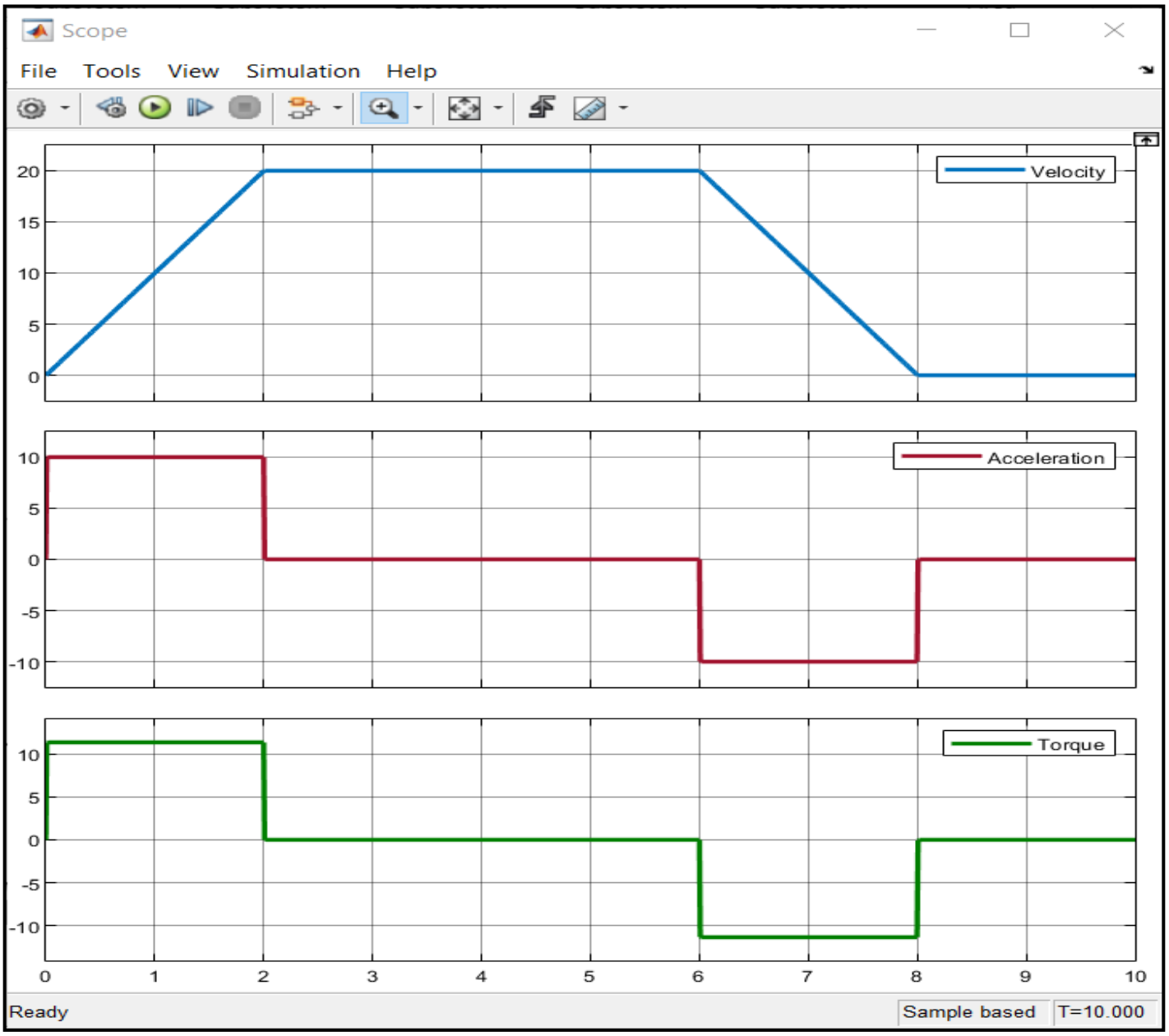

- To calculate the RMS torque, we use RMS block and add Rate Transition block before it because this block requires a discrete signal, then display the RMS torque for the cycle.

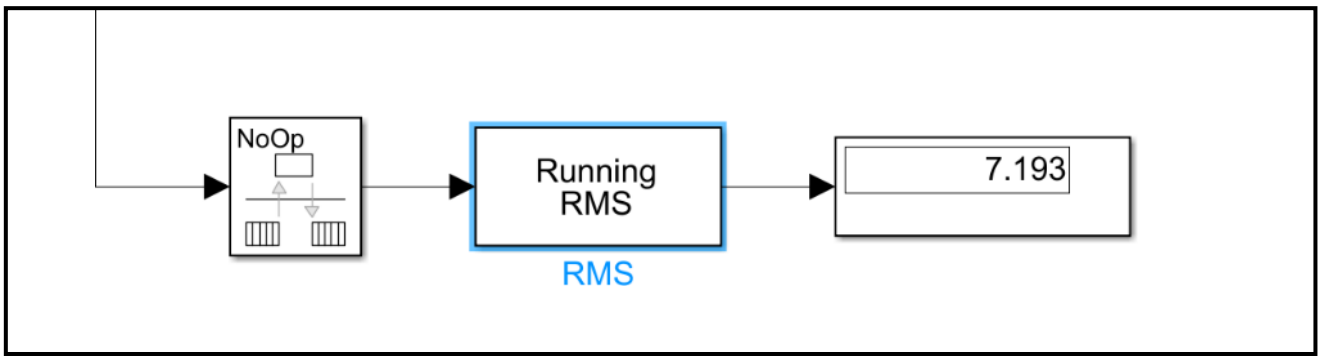
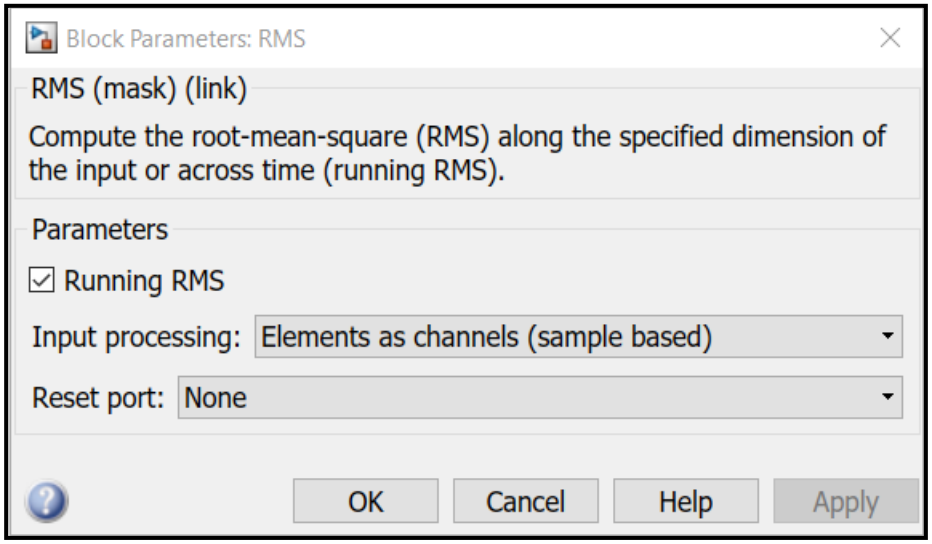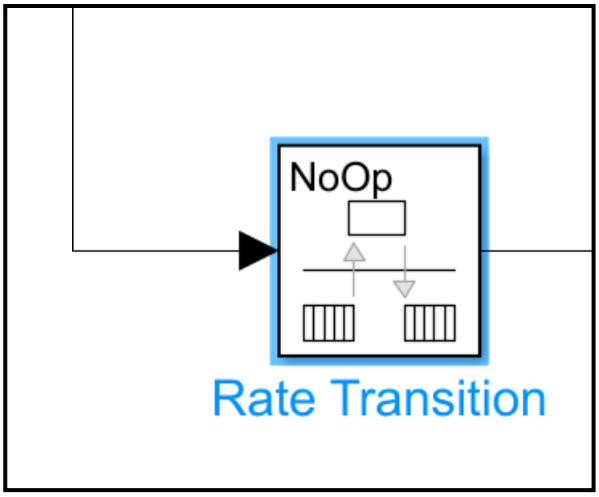
- The settings of the RMS block are to be set as following.